LINCAT SILVERLINK NATURAL GAS COUNTER-TOP CHARGRILL - W 450 MM - 16.4 KW

MODEL: CG4/N

Create that distinctive chargrilled flavour and branded appearance without the need for messy lava rocks with the Silverlink 600 Gas Chargrill. Utlising innovative radiants instead, the chargrill experience is much cleaner, while the twin zones make for maximum flexibility. The variable heat control and heat retaining cooking grids produce the clean, sharp chargrilled marks that will make your dishes even more appetizing. It's perfect for cafes, bars and restaurants.

AIA FILE NUMBER:

ITEM NUMBER:

PRODUCT OPTIONS AND ACCESSORIES

- CG4/N CH01 CATERFLEX HOSE 1/2" 1 METRE
- CG4/N CH02 CATERFLEX HOSE 1/2" 1.5 METRE
- CG4/N CN4 Lincat Silverlink 600 Free-standing Ambient Open-Top Pedestal without Doors - W 450 mm
- CG4/N SLS4 Lincat Silverlink 600 Free-standing Floor Stand - for units W 450 mm

PRODUCT FEATURES

- Uses radians which replaces the need for using messy lava rocks
- Twin zones for maximum flexibility
- The variable heat control and heat retaining cooking grids produce the clean, sharp chargrilled marks
- Splashguard to project surrounding surfaces from splashes
- Removable branding bars to allow for easy cleaning and access
- Drip draw to collect all the cooking liquids to reduce cleaning times

LINCAT SILVERLINK NATURAL GAS COUNTER-TOP CHARGRILL - W 450 MM - 16.4 KW

MODEL: CG4/N

WEIGHTS & DIMENSIONS

Width	450 mil
Depth	652 mil
Height	414 mil
Weight	27 kg

SHIPPING DETAILS

Ship Width	70 cm
Ship Depth	55 cm
Ship Height	63.5 cm
Ship Weight	29.7 kg
Number of Shipment Parcels	1
Ship Method	Small Parcel (FedEx, UPS, DHL)
Shipping Package Type	Pieces
Shipping Origin Zip Code	LN6 3QZ, UNITED KINGDOM
Quick Ship Product	No

PRODUCT CERTIFICATIONS

UK CA Made in UK

ENERGY SPECS

Primary Energy Type	Gas
Electrical Kilowatts	16.4 kW
Electrical Plug Type	Not Applicable
Number of Electrical Plugs	Not Applicable
Electrical Connection Type	Not Applicable
Number of Electrical Conductor Wires	1

Gas Type	Natural Gas
Gas Total BTUs	55956 BTU
Gas Inlet Size	0.5 in
Gas Inlet Pressure Required	20 mBar
Gas Consumption at Max Use Per Hour	1.56 m^3
Total Heat Input at Max Use	14.3 kW, 48800 BTU per hour

ADDITIONAL SPECIFICATIONS

Base Type	Not Applicable
Burner Material	Stainless Steel
Charbroiler Type	Countertop
Construction Materials	Stainless Steel
Control Type	Mechanical, Rotary Control Knob
Cooking Area Plate Depth	440 mm
Cooking Area Plate Width	375 mm
Food Production Rate	70 x 115g [4oz] burgers [frozen] per hour

Grate Type	Cast Iron
Ignition Type	Pilot Light
Number of Burners	2
Number Of Controls	2
Radiant Material	Stainless Steel
Ventless Cooking Technology	No
Slide Out Warming Rack	No
Towel Bar	No

Lincat reserves the right to modify specifications or discontinue models without incurring obligation. Dimensions nominal.

Document Auto-Generated
January 09, 2025

LINCAT SILVERLINK NATURAL GAS COUNTER-TOP CHARGRILL - W 450 MM - 16.4 KW

MODEL: CG4/N

BIDDING SPECIFICATIONS

Bidding Specifications Not Available.

TECHNICAL DRAWING

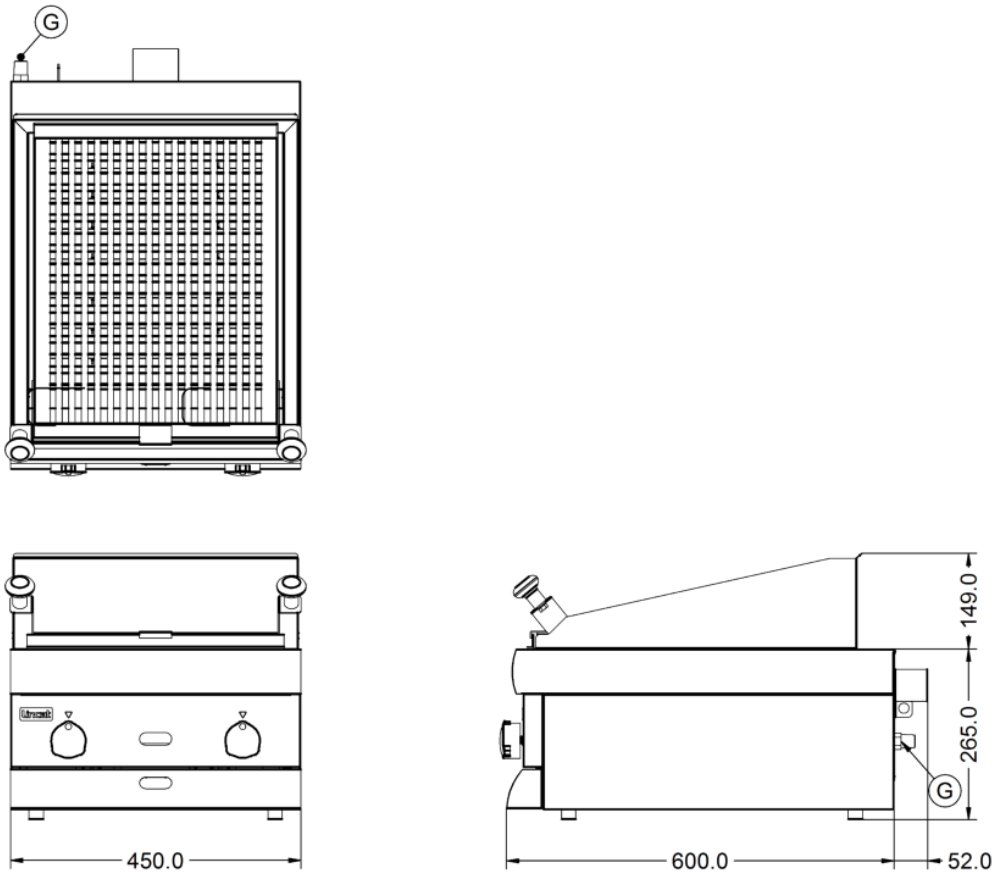

Lincat reserves the right to modify specifications or discontinue models without incurring obligation. Dimensions nominal.

Document Auto-Generated
January 09, 2025